# UV PURE®

## Powerful UV disinfection for difficult water


**Smart technology.**
**High performance.**
**Easy maintenance.**

Up to
100 gpm
per unit, multiplex systems available

35%
minimum UV transmittance

uvpure.com

Count on Hallett for any application

Potable | Wastewater | Reuse | Rainwater

Safe water, always.™

# Table of Contents

UV PURE®

# Advanced UV disinfection for challenging water

UV Pure Technologies is a manufacturer of advanced ultraviolet water disinfection systems for commercial, industrial, municipal, residential, and decentralized applications, with worldwide installations in:

- COMMERCIAL
- SYSTEM INTEGRATORS
- AGRI-FOOD
- AGRICULTURE
- MUNICIPAL
- PARKS & RECREATION
- HEALTHCARE
- RESIDENTIAL
- TRANSPORTATION


Potable | Wastewater | Reuse | Rainwater

## Hallett®

The company's range of Hallett™ products are proven for use in potable, wastewater, reuse, and rainwater disinfection systems for flows of up to 3,800 cubic metres per day (1 million gallons per day).

Hallett systems are certified to NSF/ANSI 55 Class A, NSF/ANSI/CAN 61 & 372, with performance validation to EPA & NWRI protocols for a wide range of operating conditions including low UV transmittance water. Non-certified Hallett systems are also available to achieve the same performance for applications that do not require formal certification.

UV Pure™ systems feature patented Crossfire Technology® with an innovative dual-lamp elliptical reflector design, self-cleaning quartz sleeve, and smart sensors for on-board diagnostics and remote monitoring capabilities. Crossfire Technology was selected for water disinfection on the new Boeing 787 Dreamliner, and is trusted by water industry leaders including SUEZ (formerly GE Water), Evoqua (formerly Siemens Water), the Los Angeles Department of Water and Power, Veolia, and CH2M.

UV Pure has earned an Artemis Top 50 Clean Tech Company award, Going Green Global Top 200 award, two Frost & Sullivan Best Practices Awards, and a Canadian Drinking Water Association award for innovation.

Powered by

CROSS FIRE® TECHNOLOGY

# Crossfire Technology® targets pathogens from every angle - 360 degrees

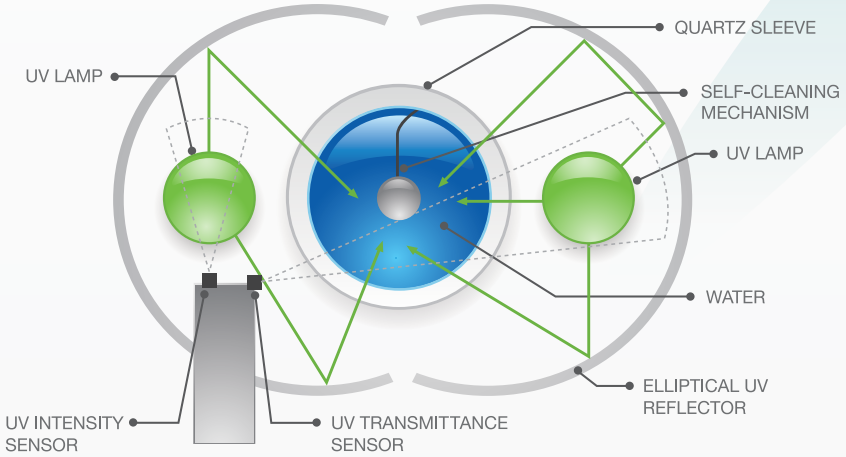


Conventional System

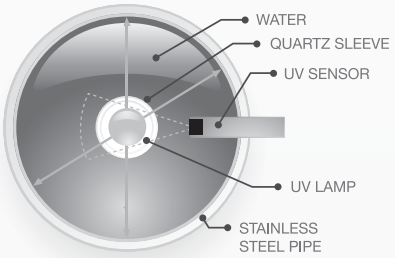


- ✓ Self-cleaning system prevents quartz fouling
- ✓ Reliable high performance in low UVT conditions
- ✓ Safe, easy lamp changes
- ✓ Smart sensors for real-time monitoring

UV Pure's patented Crossfire Technology incorporates elliptical reflectors that redirect light energy from 360 degrees to overcome shadowing and deliver a sterilizing UV dose to harmful pathogens.

Dual smart UV sensors in every Hallett system continually monitor lamp output and water quality to ensure the highest level of disinfection is consistently achieved. The smart sensors practically eliminate nuisance alarms and make troubleshooting simple when the system is out of compliance.

Effective disinfection for up to 10x more difficult water with UV transmittance from 35-95%, hardness up to 855 mg/L, and iron up to 3 mg/L

UV PURE®

Safe water, always.™

Call Us: 1-888-407-9997

www.uvpure.com info@uvpure.com

# Meet the New Hallett™
# Questions & Answers

UV PURE®

Call Us: 1-888-407-9997

| Questions | Answers |
|---|---|
| What's new **about** UV Pure's **Hallett products**? | UV Pure® has redesigned its next generation Hallett™ product series with all new features for even better reliability and operability. All of UV Pure's products are powered by Crossfire Technology® for industry-leading disinfection performance, even for challenging water quality conditions. |
| There are **four new Hallett product lines** to meet a wide range of UV water disinfection needs: | Potable · Wastewater · Reuse<br>• Hallett P for potable and drinking water applications<br>• Hallett R for reuse (gray water and rainwater) applications<br>• Hallett W for wastewater applications |
| What **sizes** are available for the new Hallett? | There are **three model sizes** for the new Hallett product lines that handle flows from 10-100 US gpm and UV transmittance (UVT) as low as 35%. The sizes are based on the nominal UV lamp length (in millimeters) for each unit:<br>• Hallett 500<br>• Hallett 750<br>• Hallett 1000 – all new |
| What is the **new Hallett 1000**? |  <br>The new Hallett 1000 is our largest model yet with a 2-inch connection for flows up to 100 US gpm. It is equipped with amalgam lamps that can be cycled 6-12 times per day, plus quadruple smart UV sensors. Use it for any application including potable water, wastewater, reuse water or rainwater. |
| What product certifications and validations are available for the new Hallett? | The new Hallett lineup includes models with ANSI/NSF certifications and third-party performance validation in accordance with the US EPA UV Disinfection Guidance Manual (UVDGM) and NWRI UV Disinfection Guidelines for Drinking Water and Water Reuse.<br>• UL 979 and CSA C22.2 No.68-09 – all Hallett models<br>• NSF/ANSI 55 Class A – Hallett PN Series<br>• NSF/ANSI/CAN 61 and NSF/ANSI 372 – all Hallett models<br>• EPA UVDGM validation – Hallett 1000<br>• NWRI validation – Hallett 1000 |

v.20210218

| Questions | Answers |
|---|---|

**What new features does the next generation Hallett have?**


All new Hallett models are equipped with:

- Color touchscreen interface
- Improved dual UV sensor array design with quad-sensor models available
- Better temperature management with built-in purge valve and available lamp heaters
- Optional 4-20 mA output with MODBUS connectivity
- Remote start capability
- Two dry contacts for warning and alarm signals
- Better message history that stores the last 99 messages with timestamp
- Optional data logging through USB port
- Built-in surge protection

**What has NOT changed in the new Hallett systems?**

New Hallett systems are still powered by UV Pure patented Crossfire Technology™ including:

- Automatic self-cleaning wipers and built-in purging that prevent fouling of the quartz sleeve by mineral scaling and biofilm, making Hallett up to 10 times more effective in difficult water applications than conventional UV systems
- Dual air-mounted lamps with forced air cooling that provide better UV chamber temperature control, helping to eliminate false lamp alarms
- Elliptical reflector design that captures and redirects UV energy from 360 degrees to minimize UV shadowing and prevent live transfer of bacteria and microorganisms
- Dual UV sensor array that provides real-time monitoring of UV lamp intensity, UV dose and net UVT while enabling superior on-board diagnostics for troubleshooting

All Hallett systems are still non-contact, meaning the operator is not exposed to contaminated water when performing routine maintenance like quartz inspections and lamp changes. In fact, the new Hallett design makes maintenance even easier.

With its small footprint and simple plug-and-play design, Hallett is quick to install and easy to start up, even in tight spaces.


| Automatic Mechanical Self-cleaning | 360° Coverage | Non-Contact Maintenance | Smart Sensors | Quick & Easy Installation |
|---|---|---|---|---|

**What are the warranty terms for new Hallett systems?**

We continue to offer one of the industry's leading warranty packages for UV Pure systems and parts:

- 12 months on sensors, temperature probes, and valves
- 12 months on LPHO lamps
- 16 months on amalgam lamps
- 36 months on electrical components, quartz sleeve, and reflectors
- 60 months for structural, hardware, and mechanical components

**Are engineering drawings available for the new Hallett systems?**

Yes, engineering drawings are available for single and multi-unit Hallett systems. For help with sizing or drawings, please contact your UV Pure sales professional or send a request to **info@uvpure.com.**

# Product Line

## Feature comparison

Effective August 1, 2019

UV PURE

| Feature | Hallett 1st Generation | Hallett Upstream 2nd Generation | Hallett 3rd Generation | Hallett 3rd Generation |
|---|---|---|---|---|
| | H30, H13 | H15xs, NC series | H500, H750 series | H1000 series |
| Crossfire Technology | Built in | Built in | Built in | Built in |
| >> Eliptical Reflectors, >> 360º Disinfection | Built in | Built in | Built in | Built in |
| >> Dual Lamps, >> Multiple Sensors | Built in | Built in | Built in | Built in |
| >> Self cleaning mechanism | Built in | Built in | Built in | Built in |
| User Interface | Single button | Four mechanical buttons | Touch screen Color | Touch screen Color |
| Operational alarms | Dual visual - audible | Dual visual - audible | Dual visual - audible | Dual visual - audible |
| Display - Liquid Crystal (LCD) | Optional | Built in | Touch screen Color | Touch screen Color |
| Communications | 4-20 mA output | Not available | 4-20 mA output Modbus | 4-20 mA output Modbus |
| UV Intensity Warning Dry Contact | NA | NA | Built in | Built in |
| Remote Start/Stop | NA | NA | Built in | Built in |
| Built-in Surge Protection | Optional | Optional | Built in | Built in |
| Message History | NA | Last 50 messages | Last 99 messages | Last 99 messages |
| Data logging - local | NA | NA | Optional | Optional |
| Flow range (@ 40 mJ/cm$^2$, 95% UVT) | up to 51 USgpm 193 L/min | up to 51 USgpm 193 L/min | up to 51 USgpm 193 L/min | up to 100 USgpm 378 L/min |
| Minimum UVT required | 45% | 50% | 50% | 35% |
| Lamp Type | LPHO | LPHO | LPHO | Amalgam |
| Lamp Expected Life | 9000 hours | 9000 hours | 9000 hours | 9000 hours |
| Lamp Heaters | NA | NA | Available | Available |
| Time Needed for Lamp Change | 5 minutes | < 5 minutes | < 2 minutes | < 2 minutes |
| Sensor Design | Analog technology | Digital technology | Digital technology NIST compliant | Digital technology NIST compliant |
| Dual Sensors | One per unit | One per unit | One per unit | One per lamp 2 per unit |
| Temperature Control | Convection cooling Optional purge valve | Forced air cooling Built-in purge valve | Improved forced air cooling Built-in purge valve | Improved forced air cooling Built-in purge valve |
| Performance Validation | Factory Tested | Factory Tested | Third party Validation (1) | US EPA UVDGM Validated |
| Drinking Water Performance Certification | NSF/ANSI 55 Class A | NSF/ANSI 55 Class A | NSF/ANSI 55 Class A | NWRI / Validation |
| Drinking Water System Components – Health Effects / Lead Free Compliance | NSF/ANSI/CAN 61 certified | NSF/ANSI/CAN 61 certified | NSF/ANSI/CAN 61 & 372 certified | NSF/ANSI/CAN 61 & 372 certified |
| Drinking Water and Water Reuse Performance Validation | Factory Tested | Factory Tested | Factory Tested | NWRI Validation |

(1) Pending
(2) NA - Not available

v.20210218

# Hallett Models & Certifications

| Product Line | Hallett P | Hallett W | Hallett R |
|---|---|---|---|
| Applications | Potable | Wastewater | Reuse & Rainwater |
| Hallett Models | 1000, 750, 500, 750PN, 500PN | 1000, 750, 500 | 1000, 750, 500 |
| Certifications & Validations | All Models - NSF/ANSI/CAN 61 & 372 | | |
| | NSF/ANSI 55 Class A (PN models only) | EPA wastewater validated (1000 model only) | NWRI reuse validated (1000 model only) |
| | EPA UVDGM validated – 1000 model only | | |

Download UV Pure Technical Data Sheets at uvpure.com/downloads/

v.20210218

UV PURE®

Call Us: 1-888-407-9997

# Technical Data Sheet
# Hallett™ 1000P

www.uvpure.com

**Potable Water Applications**

| | |
|---|---|
| **Model** | Hallett 1000P |
| **Validation protocol** | US EPA UVDGM<br>IECEE CB + CE Mark |

## Operating Range

| | |
|---|---|
| Flow (single unit)* | Up to 100 US gpm (378 Lpm) |
| UV dose | 16 - 200 mJ/cm$^2$ |
| UV Transmittance [UVT] (water) | 50 - 95% UVT |
| Hardness (water) | Maximum 855 mg/L (50 gpg) |
| Iron (water) | Maximum 3 mg/L (3 ppm) |
| Temperature (air) | 34 - 104°F (1 - 40°C) |
| Temperature (water) | 34 - 95°F (1 - 35°C) |
| Water pressure | 5 - 100 psig (34 - 690 kPa) |
| Relative humidity (air) | Maximum 70% |

## Features

| | |
|---|---|
| Quartz sleeve cleaning | Built-in - automatic mechanical wiper |
| Wiper position switch | Built-in |
| Purge valve | Built-in |
| Cooling | Built-in - forced air |
| Flow restrictor | Optional - external |
| Shut-off valve | Optional - automatic solenoid |

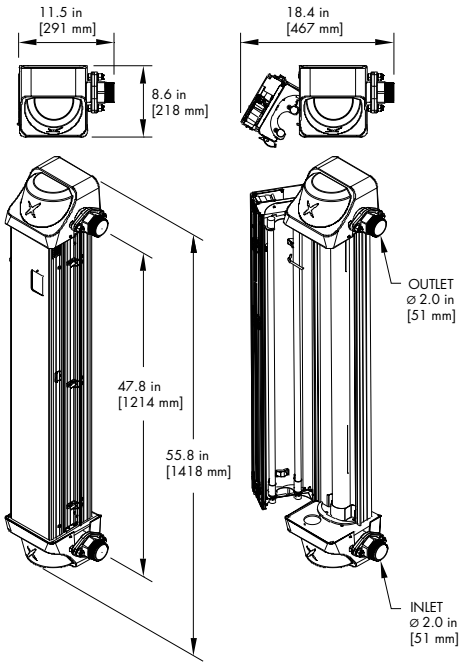


## Electrical/Instrumentation

| | |
|---|---|
| Voltage | 120/230 V AC, 50/60 Hz |
| Power consumption (nominal) | 403 W |
| Certifications | UL 979 |
| UV lamps | Dual amalgam - air mounted |
| Lamp life (typical) | 12,000 hours |
| Lamp cycles (recommended) | Maximum 6 to 12 cycling per 24 hours |
| Sensors | Quad UV - calibrated to NIST standards |
| Dry contacts | Built-in - 2 provided (warning and alarm) |
| Interface | Colour LCD resistive touchscreen display |
| Alarming | Indicator light and audible alarms |
| Remote start/stop | Built-in |
| Onboard diagnostics | Built-in |
| 4-20mA Output & Modbus | Optional |

## Physical

| | |
|---|---|
| Dimensions (H x W x D) | 55.8 x 11.5 x 8.6 in (1418 x 291 x 218 mm) |
| Weight (dry) | 52 lb (23.5 kg) |
| Weight (wet) | 58.3 lb (26.4 kg) |
| Wetted parts | Meets NSF/ANSI/CAN 61 & NSF/ANSI 372 for water up to 73°F (23°C) |
| Body materials | Anodized aluminum and 316 Stainless Steel |
| Body configuration | Double door with side hinges |
| Inlet/outlet ports | 2" MNPT Stainless Steel, optional - Stainless Steel hose |
| Ingress Protection rating | IP 51, optional - IP 66 for NEMA cabinet systems |
| Multiple units | Multiplex manifold and cabinets available |
| Warranty | 5-year limited warranty for structural, hardware and mechanical components; 3-year limited warranty on electrical components and quartz sleeves; 16-month limited warranty on bulbs; and 1-year limited warranty on sensor probes |

**Contact a UV Pure representative to confirm product operating parameters for specific applications.**

**info@uvpure.com**

**Maximum flow for single unit is 100 gpm (378 L/min) . Multiplex manifold and cabinet systems available for flows up to 1 MGD (3,800 m3/day) .*

v.20200917



MADE IN CANADA

UV PURE®

Call Us: 1-888-407-9997

# Technical Data Sheet
# Hallett™ 1000R

www.uvpure.com

**Reuse & Rainwater Applications**

| | |
|---|---|
| **Model** | Hallett 1000R |
| **Validation protocol** | US EPA UVDGM/NWRI<br>IECEE CB + CE Mark |

## Operating Range

| | |
|---|---|
| Flow (single unit)* | Up to 75 US gpm (284 Lpm) |
| UV dose | 50 - 150 mJ/cm$^2$ |
| UV Transmittance [UVT] (water) | 55 - 90% UVT for North America<br>35 - 90% UVT for Australia |
| Hardness (water) | Maximum 855 mg/L (50 gpg) |
| Iron (water) | Maximum 3 mg/L (3 ppm) |
| Temperature (air) | 34 - 104°F (1 - 40°C) |
| Temperature (water) | 34 - 95°F (1 - 35°C) |
| Water pressure | 5 - 100 psig (34 - 690 kPa ) |
| Relative humidity (air) | Maximum 70% |

## Features

| | |
|---|---|
| Quartz sleeve cleaning | Built-in - automatic mechanical wiper |
| Wiper position switch | Built-in |
| Purge valve | Built-in |
| Cooling | Built-in - forced air |
| Flow restrictor | Optional - external |
| Shut-off valve | Optional - automatic solenoid |

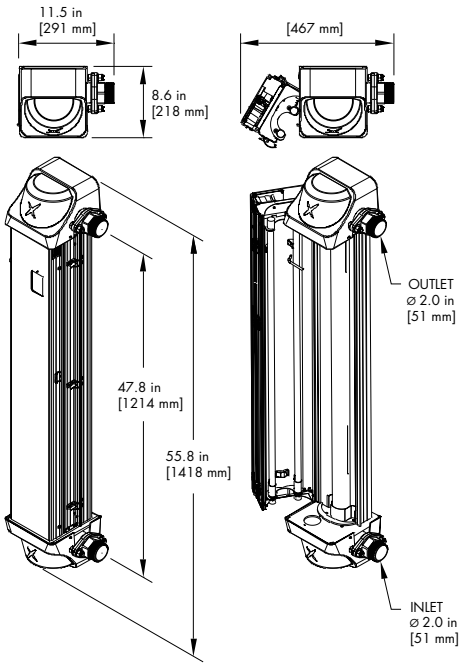


## Electrical/Instrumentation

| | |
|---|---|
| Voltage | 120/230 V AC, 50/60 Hz |
| Power consumption (nominal) | 403 W |
| Certifications | UL 979 |
| UV lamps | Dual amalgam - air mounted |
| Lamp life (typical) | 12,000 hours |
| Lamp cycles (recommended) | Maximum 6 to 12 cycling per 24 hours |
| Sensors | Quad UV - calibrated to NIST standards |
| Dry contacts | Built-in - 2 provided (warning and alarm) |
| Interface | Colour LCD resistive touchscreen display |
| Alarming | Indicator light and audible alarms |
| Remote start/stop | Built-in |
| Onboard diagnostics | Built-in |
| 4-20mA Output & Modbus | Optional |

## Physical

| | |
|---|---|
| Dimensions (H x W x D) | 55.8 x 11.5 x 8.6 in (1418 x 291 x 218 mm) |
| Weight (dry) | 52 lb (23.5 kg) |
| Weight (wet) | 58.3 lb (26.4 kg) |
| Wetted parts | Meets NSF/ANSI/CAN 61 & NSF/ANSI 372 for water up to 73°F (23°C) |
| Body materials | Anodized aluminum and 316 Stainless Steel |
| Body configuration | Double door with side hinges |
| Inlet/outlet ports | 2" MNPT Stainless Steel, optional - Stainless Steel hose |
| Ingress Protection rating | IP 51, optional - IP 66 for NEMA cabinet systems |
| Multiple units | Multiplex manifold and cabinets available |
| Warranty | 5-year limited warranty for structural, hardware and mechanical components; 3-year limited warranty on electrical components and quartz sleeves; 16-month limited warranty on bulbs; and 1-year limited warranty on sensor probes |

**Contact a UV Pure representative to confirm product operating parameters for specific applications.**

**info@uvpure.com**

**Maximum flow for single unit is 100 gpm (378 L/min). Multiplex manifold and cabinet systems available for flows up to 1 MGD (3,800 m3/day).*

v.20200917



MADE IN CANADA

UV PURE®

Call Us: 1-888-407-9997

# Technical Data Sheet
# Hallett™ 1000W

www.uvpure.com

**Wastewater Applications**

| | |
|---|---|
| **Model** | Hallett 1000W |
| **Validation protocol** | US EPA UVDGM<br>IECEE CB + CE Mark |

## Operating Range

| | |
|---|---|
| Flow (single unit)* | Up to 75 US gpm (284 Lpm) |
| UV dose | 16 - 60 mJ/cm$^2$ |
| UV Transmittance [UVT] (water) | 35 - 80% UVT |
| Hardness (water) | Maximum 855 mg/L (50 gpg) |
| Iron (water) | Maximum 3 mg/L (3 ppm) |
| Temperature (air) | 34 - 104°F (1 - 40°C) |
| Temperature (water) | 34 - 95°F (1 - 35°C) |
| Water pressure | 5 - 100 psig (34 - 690 kPa ) |
| Relative humidity (air) | Maximum 70% |

## Features

| | |
|---|---|
| Quartz sleeve cleaning | Built-in - automatic mechanical wiper |
| Wiper position switch | Built-in |
| Purge valve | Built-in |
| Cooling | Built-in - forced air |
| Flow restrictor | Optional - external |
| Shut-off valve | Optional - automatic solenoid |

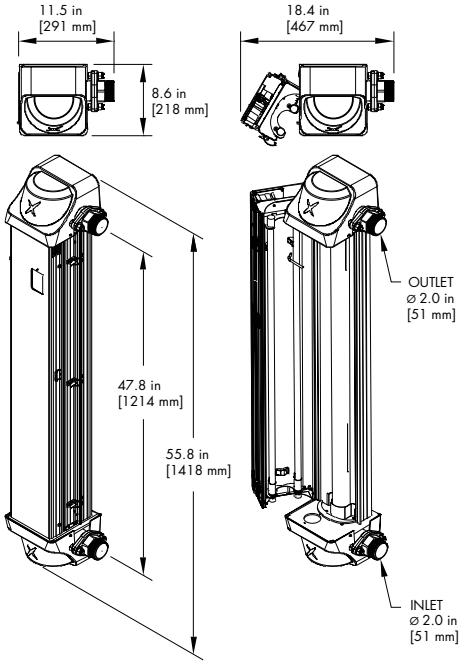


## Electrical/Instrumentation

| | |
|---|---|
| Voltage | 120/230 V AC, 50/60 Hz |
| Power consumption (nominal) | 403 W |
| Certifications | UL 979 |
| UV lamps | Dual amalgam - air mounted |
| Lamp life (typical) | 12,000 hours |
| Lamp cycles (recommended) | Maximum 6 to 12 cycling per 24 hours |
| Sensors | Quad UV - calibrated to NIST standards |
| Dry contacts | Built-in - 2 provided (warning and alarm) |
| Interface | Colour LCD resistive touchscreen display |
| Alarming | Indicator light and audible alarms |
| Remote start/stop | Built-in |
| Onboard diagnostics | Built-in |
| 4-20mA Output & Modbus | Optional |

## Physical

| | |
|---|---|
| Dimensions (H x W x D) | 55.8 x 11.5 x 8.6 in (1418 x 291 x 218 mm) |
| Weight (dry) | 52 lb (23.5 kg) |
| Weight (wet) | 58.3 lb (26.4 kg) |
| Wetted parts | Meets NSF/ANSI/CAN 61 & NSF/ANSI 372 for water up to 73°F (23°C) |
| Body materials | Anodized aluminum and 316 Stainless Steel |
| Body configuration | Double door with side hinges |
| Inlet/outlet ports | 2" MNPT Stainless Steel, optional - Stainless Steel hose |
| Ingress Protection rating | IP 51, optional - IP 66 for NEMA cabinet systems |
| Multiple units | Multiplex manifold and cabinets available |
| Warranty | 5-year limited warranty for structural, hardware and mechanical components; 3-year limited warranty on electrical components and quartz sleeves; 16-month limited warranty on bulbs; and 1-year limited warranty on sensor probes |

**Contact a UV Pure representative to confirm product operating parameters for specific applications.**

**info@uvpure.com**

**Maximum flow for single unit is 100 gpm (378 L/min). Multiplex manifold and cabinet systems available for flows up to 1 MGD (3,800 m3/day).*

v.20200917



MADE IN CANADA

UV PURE®

Call Us: 1-888-407-9997

# Technical Data Sheet
# Hallett™ 750PN

www.uvpure.com

**Potable Water Applications**

| | |
|---|---|
| **Model** | Hallett 750PN |
| **Validation protocol** | NSF/ANSI 55 CLASS A by NSF International<br>Watermark of Australia |

## Operating Range

| | |
|---|---|
| Flow (single unit) | Up to 27.4 US gpm (104 Lpm) |
| UV dose | Min. 40 mJ/cm$^2$ |
| UV Transmittance [UVT] (water) | Minimum 75% UVT |
| Hardness (water) | Maximum 855 mg/L (50 gpg) |
| Iron (water) | Maximum 3 mg/L (3 ppm) |
| Temperature (air and water) | 34 - 104°F (1 - 40°C) |
| Water pressure | 5 - 100 psig (34 - 690 kPa) |
| Relative humidity (air) | Maximum 70% |

## Features

| | |
|---|---|
| Quartz sleeve cleaning | Built-in - automatic mechanical wiper |
| Wiper position switch | Built-in |
| Purge valve | Built-in |
| Cooling | Built-in - forced air |
| Flow restrictor | Standard - internal |
| Shut-off valve | Optional - automatic solenoid |

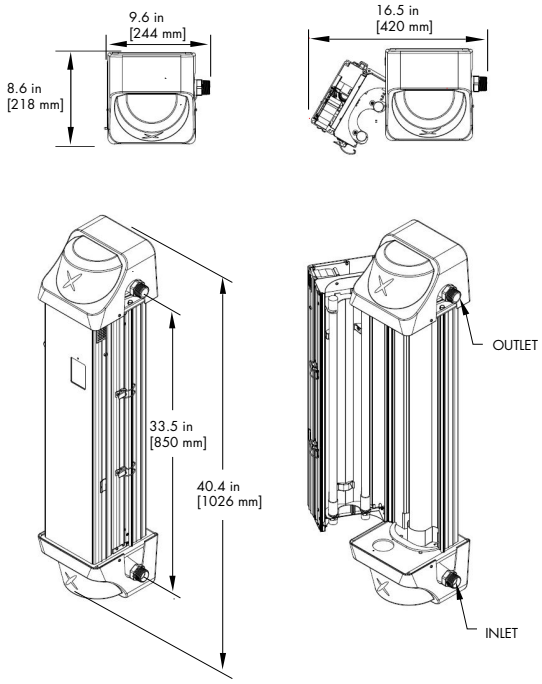


## Electrical/Instrumentation

| | |
|---|---|
| Voltage | 120 VAC/60 Hz; or 230 VAC/50 Hz |
| Power consumption (nominal) | 222 W |
| Certifications | UL 979; IEC 60335-1; IEC 60335-2-109; CE |
| UV lamps | Dual LPHO - air mounted |
| Lamp life (typical) | 9,000 hours |
| Lamp cycles (recommended) (preheat ballast) | Maximum 12 per 24 hours |
| Sensors | Dual UV - calibrated to NIST standards |
| Dry contacts | Built-in - 2 provided (warning and alarm) |
| Interface | Colour LCD resistive touchscreen display |
| Alarming | Indicator light and audible alarms |
| Remote start/stop | Built-in |
| Onboard diagnostics | Built-in |
| 4-20mA Output & Modbus | Optional |

## Physical

| | |
|---|---|
| Dimensions (H x W x D) | 40.4 x 9.6 x 8.6 in (1026 x 244 x 218 mm) |
| Weight (dry) | 34 lb (15.5 kg) |
| Weight (wet) | 38 lb (17.2 kg) |
| Wetted parts | Meets NSF/ANSI/CAN 61 & NSF/ANSI 372 for water up to 73°F (23°C) |
| Body materials | Anodized aluminum and 316 Stainless Steel |
| Body configuration | Double door with side hinges |
| Inlet/outlet ports | 1" MNPT Stainless Steel, optional - Stainless Steel hose |
| Ingress Protection rating | IP 51, optional - IP 66 for NEMA cabinet systems |
| Multiple units | Multiplex manifold and cabinets available |
| Warranty | 5-year limited warranty for structural, hardware and mechanical components; 3-year limited warranty on electrical components and quartz sleeves; 12-month limited warranty on bulbs; and 1-year limited warranty on sensor probes |

**Contact a UV Pure representative to confirm product operating parameters for specific applications.**

**info@uvpure.com**

v.20221111



MADE IN CANADA

The Hallett 750PN is installed indoors on a wall in a dry location. The unit should be plumbed in downstream of any pretreatment devices but upstream of distribution plumbing. The Hallett 750PN plugs into a 120Vac ground-fault circuit-interrupter (GFCI) or a 230Vac residual current device (RCD) (dependent on territory). The Hallett 750PN incorporates both audible and visual alarms to indicate system status and an optional normally closed solenoid valve is available to shut off the water supply in the event of a system fault.

The automatic quartz cleaning feature is engineered to eliminate the periodic maintenance required by conventional UV systems. The UV lamps p/n C300064, Lamp Pair p/n C300065, require replacement after 12 months of operation.

System Tested and Certified by NSF International against NSF/ANSI Standard 55 for Disinfection Performance, Class A.

This Class A system conforms to NSF/ANSI 55 for the disinfection of microbiologically contaminated water that meets all other public health standards. This system is not intended to convert wastewater or raw sewage to drinking water. The system is intended to be installed on visually clear water.

NSF/ANSI 55 defines wastewater to include human and/or animal body waste, toilet paper, and any other material intended to be deposited in a receptacle designed to receive urine and/or feces (blackwaste); and other waste materials deposited inplumbing fixtures
(greywaste).

If this system is used for the treatment of untreated surface waters or ground water under the direct influence of surface water, a device found to be in conformance for cyst reduction under the appropriate NSF/ANSI Standard shall be installed upstream of the system.

Manufactured by: UV Pure Technologies Inc.
455 Milner Avenue Toronto, Ontario,
M1 B 2K4
416-208-9884
888-407-9997
info@uvpure.com

All replacement parts may be purchased through UV Pure.

The following table is in accordance with standard AS 3497:2021

| CATEGORY | TREATMENT | FUNCTION | Hallett 750PN |
|---|---|---|---|
| I | Bacteriostatic | Will stop bacteria increasing but will not remove them unless Category II(a) is passed | N/A |
| II(a) | Bacterial removal | Will remove or inactivate bacteria | PASS |
| II(b) | Virus removal | Will remove or inactivate viruses* | PASS |
| II(c) | Protozoa removal | Will remove or inactivate Cryptosporidium and Giardia. Will not remove or inactivate bacteria and viruses unless Category II(a) and Category II(b) are passed. | PASS |
| III | Turbidity and particulate removal | Reduces cloudiness | N/A |
| IV | Taste and Odour reduction | Reduces tastes and odours | N/A |
| V | Chemical contaminant reduction | Decreases certain chemicals | N/A |
| VI | Other treatment type not captured in Categories I to V | No verification methods are defined | N/A |

*Most viruses such as poliovirus and rotavirus

UV PURE®

Call Us: 1-888-407-9997

# Technical Data Sheet
# Hallett™ 500PN

www.uvpure.com

**Potable Water Applications**

| | |
|---|---|
| **Model** | Hallett 500PN |
| **Validation protocol** | NSF/ANSI 55 CLASS A by NSF International<br>Watermark of Australia |

## Operating Range

| | |
|---|---|
| Flow (single unit) | Up to 16.5 US gpm (62.5 Lpm) |
| UV dose | Min. 40 mJ/cm$^2$ |
| UV Transmittance [UVT] (water) | Minimum 75% UVT |
| Hardness (water) | Maximum 855 mg/L (50 gpg) |
| Iron (water) | Maximum 3 mg/L (3 ppm) |
| Temperature (air and water) | 34 - 104°F (1 - 40°C) |
| Water pressure | 5 - 100 psig (34 - 690 kPa) |
| Relative humidity (air) | Maximum 70% |

## Features

| | |
|---|---|
| Quartz sleeve cleaning | Built-in - automatic mechanical wiper |
| Wiper position switch | Built-in |
| Purge valve | Built-in |
| Cooling | Built-in - forced air |
| Flow restrictor | Standard - internal |
| Shut-off valve | Optional - automatic solenoid |

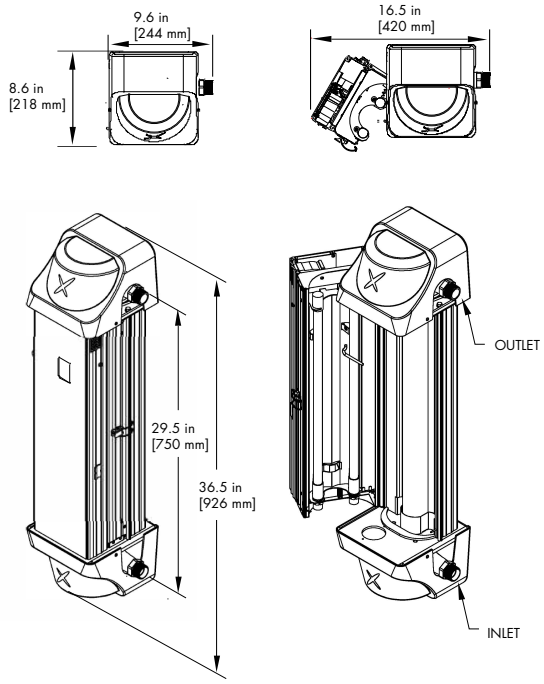


## Electrical/Instrumentation

| | |
|---|---|
| Voltage | 120 VAC/60 Hz; or 230 VAC/50 Hz |
| Power consumption (nominal) | 196 W |
| Certifications | UL 979; IEC 60335-1; IEC 60335-2-109; CE |
| UV lamps | Dual LPHO - air mounted |
| Lamp life (typical) | 9,000 hours |
| Lamp cycles (recommended) (preheat ballast) | Maximum 12 per 24 hours |
| Sensors | Dual UV - calibrated to NIST standards |
| Dry contacts | Built-in - 2 provided (warning and alarm) |
| Interface | Colour LCD resistive touchscreen display |
| Alarming | Indicator light and audible alarms |
| Remote start/stop | Built-in |
| Onboard diagnostics | Built-in |
| 4-20mA Output & Modbus | Optional |

## Physical

| | |
|---|---|
| Dimensions (H x W x D) | 36.5 x 9.6 x 8.6 in (926 x 244 x 218 mm) |
| Weight (dry) | 32 lb (14.6 kg) |
| Weight (wet) | 36 lb (16.3 kg) |
| Wetted parts | Meets NSF/ANSI/CAN 61 & NSF/ANSI 372 for water up to 73°F (23°C) |
| Body materials | Anodized aluminum and 316 Stainless Steel |
| Body configuration | Double door with side hinges |
| Inlet/outlet ports | 1" MNPT Stainless Steel, optional - Stainless Steel hose |
| Ingress Protection rating | IP 51, optional - IP 66 for NEMA cabinet systems |
| Multiple units | Multiplex manifold and cabinets available |
| Warranty | 5-year limited warranty for structural, hardware and mechanical components; 3-year limited warranty on electrical components and quartz sleeves; 12-month limited warranty on bulbs; and 1-year limited warranty on sensor probes |

**Contact a UV Pure representative to confirm product operating parameters for specific applications.**

**info@uvpure.com**

v.20221111



MADE IN CANADA

The Hallett 500PN is installed indoors on a wall in a dry location. The unit should be plumbed in downstream of any pretreatment devices but upstream of distribution plumbing. The Hallett 500PN plugs into a 120Vac ground-fault circuit-interrupter (GFCI) or a 230Vac residual current device (RCD) (dependent on territory). The Hallett 500PN incorporates both audible and visual alarms to indicate system status and an optional normally closed solenoid valve is available to shut off the water supply in the event of a system fault.

The automatic quartz cleaning feature is engineered to eliminate the periodic maintenance required by conventional UV systems. The UV lamps p/n E300209, Lamp Pair p/n E300210, require replacement after 12 months of operation.

System Tested and Certified by NSF International against NSF/ANSI Standard 55 for Disinfection Performance, Class A.

This Class A system conforms to NSF/ANSI 55 for the disinfection of microbiologically contaminated water that meets all other public health standards. This system is not intended to convert wastewater or raw sewage to drinking water. The system isintended to be installed on visually clear water.

NSF/ANSI 55 defines wastewater to include human and/or animal body waste, toilet paper, and any other material intended to be deposited in a receptacle designed to receive urine and/or feces (blackwaste); and other waste materials deposited inplumbing fixtures
(greywaste).

If this system is used for the treatment of untreated surface waters or ground water under the direct influence of surface water, a device found to be in conformance for cyst reduction under the appropriate NSF/ANSI Standard shall be installed upstream of the system.

Manufactured by: UV Pure Technologies Inc.
455 Milner Avenue Toronto, Ontario,
M1 B 2K4
416-208-9884
888-407-9997
info@uvpure.com

All replacement parts may be purchased through UV Pure.

The following table is in accordance with standard AS 3497:2021

| CATEGORY | TREATMENT | FUNCTION | Hallett 500PN |
|---|---|---|---|
| I | Bacteriostatic | Will stop bacteria increasing but will not remove them unless Category II(a) is passed | N/A |
| II(a) | Bacterial removal | Will remove or inactivate bacteria | PASS |
| II(b) | Virus removal | Will remove or inactivate viruses* | PASS |
| II(c) | Protozoa removal | Will remove or inactivate Cryptosporidium and Giardia. Will not remove or inactivate bacteria and viruses unless Category II(a) and Category II(b) are passed. | PASS |
| III | Turbidity and particulate removal | Reduces cloudiness | N/A |
| IV | Taste and Odour reduction | Reduces tastes and odours | N/A |
| V | Chemical contaminant reduction | Decreases certain chemicals | N/A |
| VI | Other treatment type not captured in Categories I to V | No verification methods are defined | N/A |

*Most viruses such as poliovirus and rotavirus

# Current Installations

## Generation 3

Parks Canada / Arcadis – Canada wide (2019) – Potable Water

UV Pure® is pleased to announce our partnership with Parks Canada on their Trent Severn UV upgrade project through UV Pure Channel partner in Ontario. Parks Canada is replacing conventional UV systems on more than 30 park sites with UV Pure third Generation of UV's. Parks Canada becomes the first government agency to incorporate our latest UV technology in their parks and campgrounds.

## Generation 1 & 2

Memorial Sloan Kettering Cancer Center – New York City, NY, USA (2019) – Potable Water

UV Pure® is proud to announce our recent installations at Memorial Sloan Kettering Cancer Center, NY. MSKCC is the largest and oldest private cancer center in the world. This shipment is part of comprehensive disinfection package offered by UV Pure channel partner in the New York region. UV Pure supplied 2 large plug and play multiplex UV disinfections modules to the facility and allowing the Cancer center to meet it's extremely high water quality objectives.

# Case Studies

## Potable Water

- Heriot Bay – Quadra Island, BC – Canada (2015)
  *The automatic self-cleaning mechanism in the UV Pure® Hallett™system enabled Heriot Bay Inn to eliminate the alarms, iron fouling and frequent cleanings that were often experienced with a conventional light-in-a-pipe UV unit.*

- Tallahassee VA Outpatient Clinic – Tallahassee, Florida – USA (2016)
  *US Veterans Administration clinic adds UV Pure® systems to protect patients from Legionella and chlorine-resistant pathogens.*

- Progresar ESP – Valle del Rio Teusaca, Cundinamarca – Colombia (2015)
  *Colombian community responds to stronger water regulations with UV Pure® systems.*

- Parkbridge Sama Community – Havelock, ON – Canada (2004) – Potable water
  *No fouling to Hallett™ systems after more than a decade of hard water treatment at a recreational community.*

## Rainwater

- GO Transit Bus Service and Storage Facility - Hamilton, ON – Canada (2016)
  *UV Pure® systems provide chemical-free disinfection of harvested rainwater for bus wash station.*

- Algoma Orchards – Newcastle, ON – Canada (2017)
  *Algoma Orchards recycles process water and gains efficiency.*

## Wastewater

- Cataumet Wastewater treatment plant – Cataumet, MA – USA (2017)
  *UV Pure® Hallett™ systems team with decentralized MBBR to protect sensitive marine environment.*

Read more about UV Pure's case studies at uvpure.com/case-studies/

# Contact Us

**Manufacturing Facility: UV Pure Technologies Inc.**

1-455 Milner Ave, Toronto, ON, Canada M1B 2K4

**Tel:** + 1 (416) 208 9884 | **Website:** www.uvpure.com
**Toll Free:** +1 (888) 407 9997 | **Email:** info@uvpure.com

**Sean Woodland**

National Sales Manager – Canada

**Tel:** +1 (888) 407 9997

**Cell:** +1 (613) 876 9237

**Email:** swoodland@uvpure.com

**Robert Cundall**

Regional Sales Manager – Eastern US

**Tel:** +1 (888) 407 9997

**Cell:** + 1 (315) 565 8835

**Email:** rcundall@uvpure.com

**Lisa Vandepol**

Customer Service Coordinator

**Tel:** + 1 (416) 208 9884 ext. 229

**Email:** lvandepol@uvpure.com

**Alex Zammit**

Service Manager

**Tel:** + 1 (416) 208 9884 ext. 222

**Email:** azammit@uvpure.com